Technical Datasheet

Article - No:	TDS-PD150	Revision: A0
Remarks	single use only	

Specification	
Product name	PD150, 150mm Petri dish,15mm height
Production conditions	Class 100,000 clean room production
	No release agent is used
Classification	CE/IVD
Dimensions	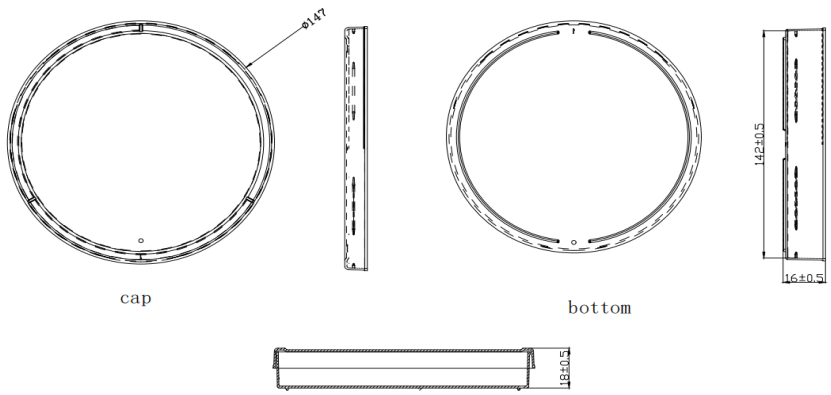
Colour	Clear
Graduation	N/A
Nominal Capacity	150mm diameter
Material Characteristics	polystyrene (PS), premium surface
Sterile	EO sterilization
Product Characteristics	biologically inert
	no heavy metals according to EC/94/62
Purity Grade	free of RNase and DNase
	free of pyrogens
	free of PCR inhibitors
	free of human DNA
	free of endotoxins
	free of ATP
Shelf - Life	36 months at controlled storage conditions
Packaging	pcs per bag: 10
	bag per case: 16
Storage	Storage Temperature: 20 ° C-25 ° C, humidity 40% -60%
	Keep clean, ventilated and out of direct sunlight
Approved by PakGent quality department	